Next

Mesosphere

Week 3

Back Next

Section One	Section Two
Solving equations	Coordinates
Key skills	Problem solving
Averages	Exam question
Area	Formula

Solving equations

Back Next

Work out the value of the letter.

1 $19 + x = 26$

$x =$

2 $11 - y = 7$

$y =$

3 $m + 12 = 101$

$m =$

4 $n - 9 = 4$

$n =$

5 $s \times 8 = 32$

$s =$

6 $t \div 4 = 6$

$t =$

A $4 + x = 1$

$x =$

B $10 - y = 11$

$y =$

C $m + 10 = 3.5$

$m =$

D $n - 7 = -104$

$n =$

E $7s = 56$

$s =$

F $\frac{t}{2} = 4.5$

$t =$

$0.45 - x = -0.25$

$x =$

$\frac{1}{3} - y = \frac{1}{4}$

$y =$

$m + 6.2 = 7.02$

$m =$

$n - 0.15 = -0.015$

$n =$

$\frac{2}{3}s = 24$

$s =$

$\frac{130}{5t} = 20$

$t =$

Key skills

Back Next

1 Complete the table of values for $\boldsymbol{y = 2x + 1}$

$\boldsymbol{x}$		-2	0	1	2		8.5	15
$\boldsymbol{y}$	-99					7		

2 $\frac{2}{3} + \frac{1}{5} =$

3 Calculate the value of x.

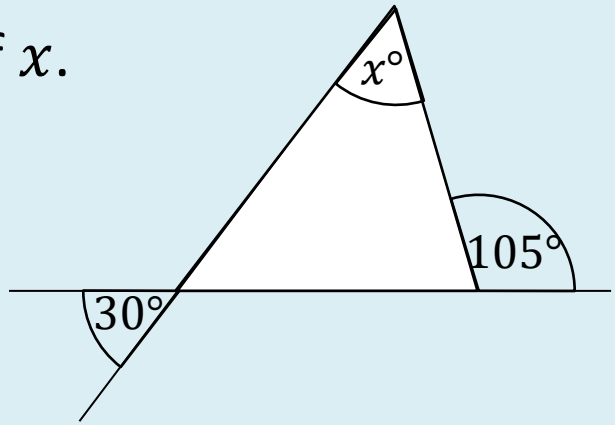

Averages

Back Next

	Mode	Median	Mean
1, 2, 2, 3	1	A	
1, 1, 2, 5, 3, 8, 8	2	B	
0, 1, 2, 5, 6, 7	3	C	

Numbers must be in order of size starting with the smallest.

Have a mode of 5.	Have a median of 5.	Have a mean of 5.
4 ------- -------	D ------- -------	------- -------
5 ------- ------- -------	E ------- ------- -------	------- ------- 14
6 ------- ------- ------- -------	F ------- ------- 8 -------	------- ------- ------- 10

Area

Back Next

Calculate the area of the following shapes.

1 ----------

2 ----------

3 ----------

4 ----------

5 ----------

6 ----------

1

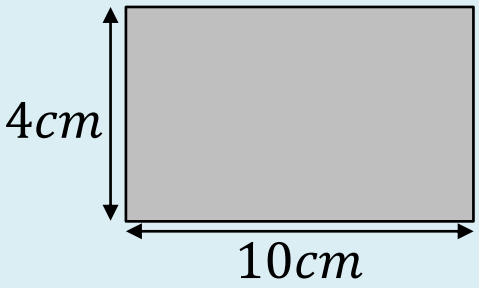

2

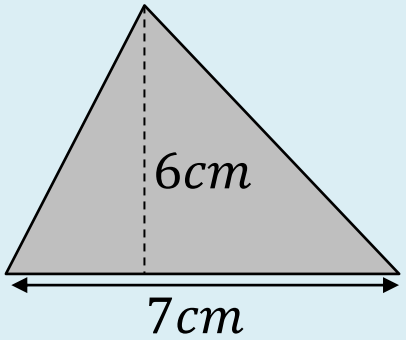

3

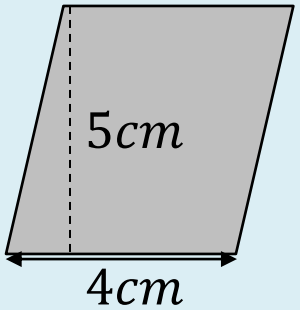

4

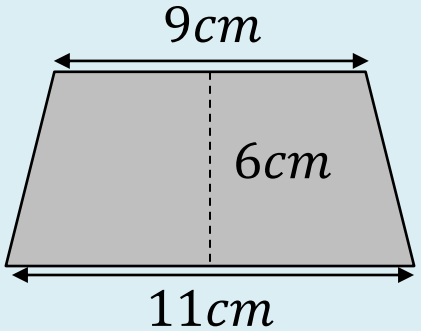

5

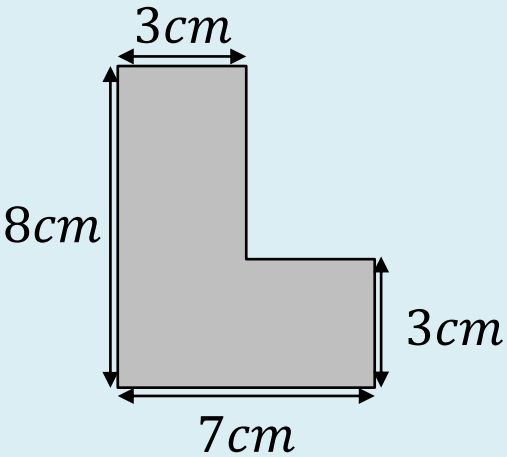

6

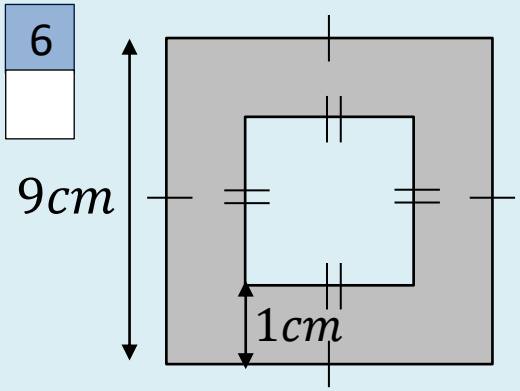

Reflection

Back Next

Reflect on the first section.

WWW:

EBI:

Coordinates

Back Next

1 Plot $(5,6)$ with a cross. Label it B.

2 Midpoint of AB is (___, ___)

3 Plot $(5,-2)$ with a cross. Label it C.

4 Midpoint of BC is (___, ___)

5 Plot point D so that $ABCD$ is a square.

6 The centre of the square has the coordinate (___, ___)

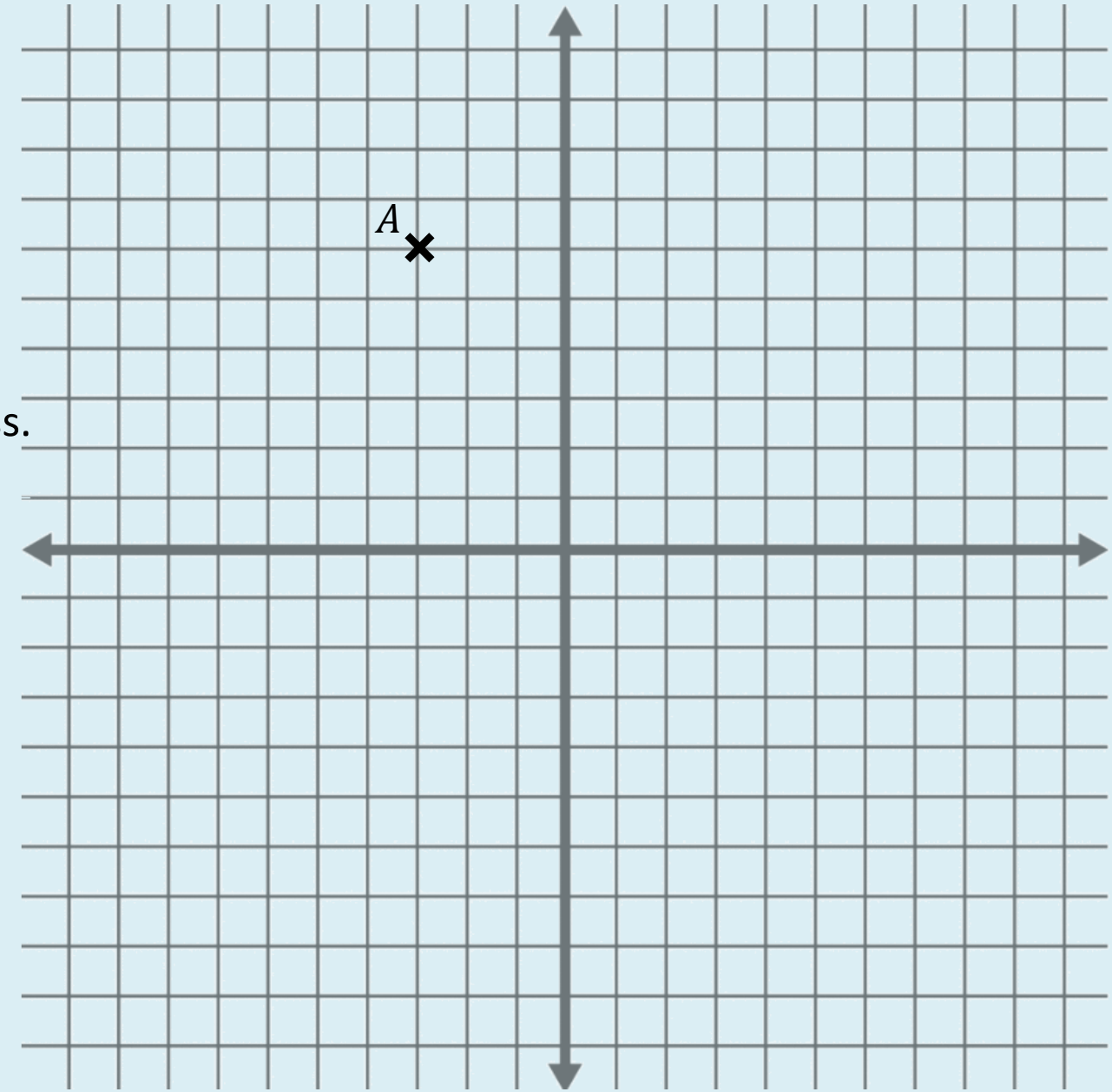

1

Gill is now 28 years old and is a teacher of mathematics at a school which has 600 pupils. There are 30 more girls than boys at the school.
How many girls are at Gill's school?

A 270 B 300 C 315 D 330 E 345

2

In the box are 7 blocks. It is possible to slide the blocks around so that another block can be added to the box. What is the minimum number of blocks that must be moved?

A 2 B 3 C 4 D 5 E *It is not possible*

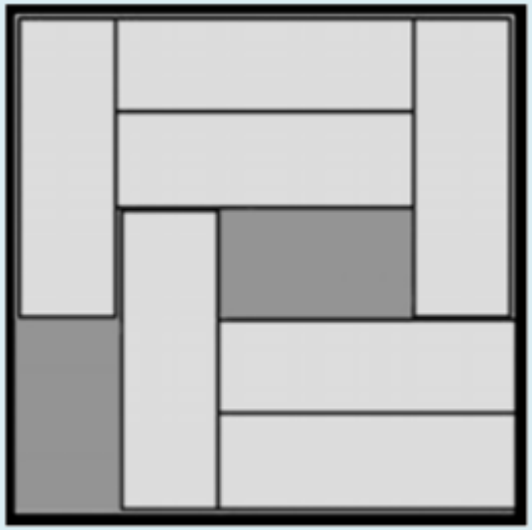

3

Linda has a very thin sheet of paper measuring $20cm$ by $30cm$. She repeatedly folds her paper in half by folding along the shorter line of symmetry. She finishes when she has a rectangle with an area of $75\ cm^2$. What is the perimeter of her final rectangle?

Exam questions

Edexcel Paper 2 June 2017

Back Next

1 Suha is going to buy 150 envelopes.

Here is some information about the cost of envelopes in two shops.

Letters2send	**Stationery World**
Pack of 25 envelopes for £3.49	Pack of 10 envelopes for £2.10 Buy 2 packs get 1 pack free

Suha wants to buy the envelopes as cheaply as possible.

Which shop should Suha buy the 150 envelopes from?
You must show how you get your answer.

(4 marks)

Formula

Back Next

Geometric sequence

In a **Geometric Sequence** each term is found by **multiplying** the previous term by a **constant**. The constant is called the **common ratio**. Here is an example,

$2, 4, 8, 16, 32 \ldots$

$\times 2$

$$x_n = ar^{(n-1)}$$

$a = first\ term$

$r = common\ ratio$

$n = term\ number$

This formula is to calculate a term in the sequence.

1. Find the 5th term of the sequence that has a first term of 3 and a common ratio of 4.

2. Find the 10th term of the same sequence.

3. A geometric sequence starts $6, 18, 54 \ldots$ What is the 20th term of the sequence?

A geometric sequence has a common ratio of 5 and the 8th term is 312 500. What is the first term in the sequence?

Reflection

Back Next

Well done for completing the lesson.

Reflection